How efficient is your temperature control?

Prime movers need reliable temperature control to enable fast warm up, accurate control and efficient operation, minimising emissions and maximising output

Thermostatic Valve Solutions
Overview

amot

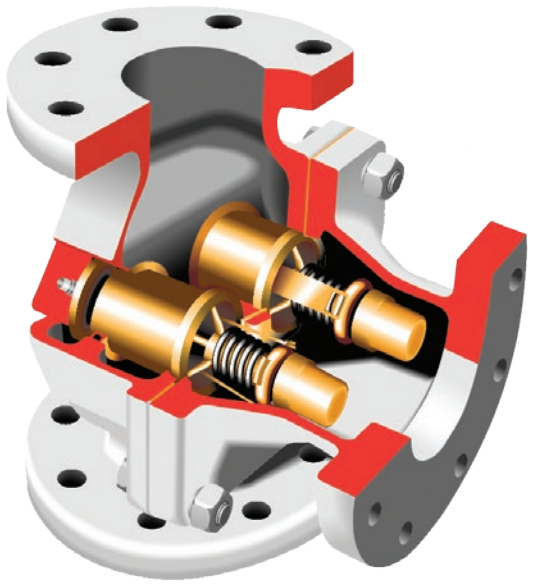

The AMOT Temperature Control Solution

AMOT Thermostatic Valves offer many advanced features:

- No external power source required - simple, low cost installation
- Rugged, robust construction
- No user setting needed - 'fit and forget' solution
- Very low friction characteristics
- Easy installation - operates in any mounting position
- Tamperproof temperature settings

Positive Acting Temperature Control

AMOT Thermostatic Valves provide reliable control of fluid temperatures in cooling systems, heat recovery and many other temperature control applications. They are also suitable for process control and industrial applications where fluids must be mixed or diverted depending upon temperatures.

All AMOT internally sensed valves have positive 3-way action. This ensures that on process start up all of the flow is through the bypass line, giving the fastest possible warm-up time.

Operation and flow control is established by the temperature element, which constantly monitors and regulates the medium to the exact specified temperature setting.

When required the valve will positively shut off the by-pass line to give full cooling.

The 3-way valve ensures constant volume flow in the system and gives no restriction during the warm-up cycle, ensuring maximum performance.

Typical Applications

Diverting Applications

When valves are used for diverting service, the inlet is Port A (temperature sensing port), with Port C being connected to the cooler, and Port B connected to the cooler by-pass line.

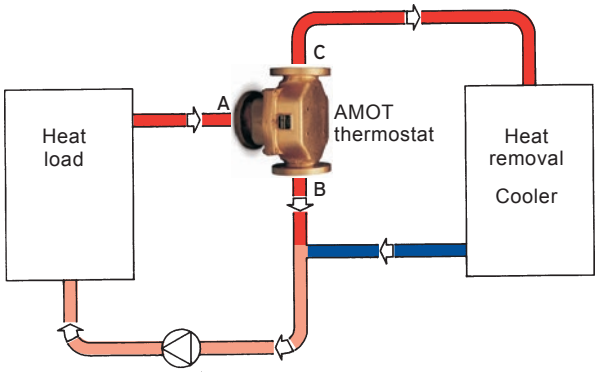

Mixing Applications

When valves are used for mixing service, Port C is the cold fluid inlet port from the cooler, Port B is the hot by-pass fluid inlet, and Port A the common outlet. Port A is the temperature sensing port and will mix the hot and cold fluids in the correct proportion so as to produce the desired outlet temperature leaving Port A.

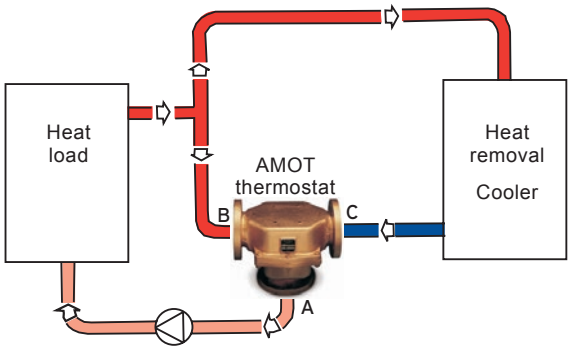

Marine

Engines - lube oil, high temperature (HT), low temperature (LT) water
Compressors and Gearboxes - lube oil
Heat Recovery and Water Makers - water circuits

DN40 to DN200
1½" to 8" - Type B

DN15 to DN40
½" to 1½" - Type C

DN40
1½" - Type E

Power Generation

Engines and Turbines - lube oil, high temperature (HT), low temperature (LT) water
Heat Recovery - water circuits

DN40 to DN200
1½" to 8" - Type B

DN15 to DN40
½" to 1½" - Type C

DN40
1½" - Type E

Offshore

Oil and Water Circuits - steel and stainless steel valve configurations
NACE or NORSOK certified

DN40 to DN200
1½" to 8" - Type B

DN40
1½" - Type E

Nuclear

Emergency Diesel Generators (EDG)
Cooling Circuits - lube oil, high temperature (HT), low temperature (LT)

DN40 to DN200
1½" to 8" - Type B

DN100 to DN150
4" to 6" - Type H

Renewable Energy

Wind Turbines - lubricating and hydraulic oil temperature control
Solar Panels
Tidal / Wave Energy - lubricating oil temperature control

DN20
¾"- Type J

DN15 to DN40
½" to 1½" - Type C

DN40
1½" - Type E

Refrigeration

High pressure steel valves - flanged or welded connections for refrigerant contaminated lube oil circuits

DN40 to DN200
1½" to 8" - Type B

DN40
1½" - Type E

DN20 to DN80
¾" to 3" - Type R

Custom Engineered Valves

AMOT designs and manufactures thermostatic valves to meet specific engine and application requirements. Contact us for more information.

Selecting the right Thermostatic Control Valve

Selecting the right thermostatic control valve requires specific information about the application and engine:

- Application
- Fluid and flow rate
- Control temperature
- Body material and connection
- Maximum working pressure (MWP)

Model	Sizes and Connections	Flow Rate	Body Material	Control Temperature	Maximum Working Pressure (MWP)
B	DN40 to DN50 (1½" to 2") threaded DN40 to 200 (1½" to 8") flanged	15 to 400 m^3/hr (68 to 1750 US gpm)	Cast iron, ductile iron, aluminium, steel, stainless steel	13 to 116°C 55 to 240°F	Up to 45 bar (655 psi)
C	DN15 to DN40 (½" to 1½") threaded DN 40 (1½") flanged	1.4 to 12 m^3/hr (6 to 54 US gpm)	Cast iron, bronze, aluminium, steel or stainless steel	18 to 113°C 65 to 230°F	Up to 72 bar (1050 psi)
E	DN40 (1½") threaded or flanged	8 to 18.3 m^3/hr (35 to 79 US gpm)	Cast iron, bronze, steel or stainless steel housings	29 to 114°C 85 to 237°F	Up to 69 bar (1000 psi)
H	DN100 to DN150 (4"to 6") flanged	75 to 280 m^3/hr (330 to 1232 US gpm)	Steel or stainless steel housings	13 to 116°C 55 to 240°F	Up to 45 bar (655 psi)
J	DN20 (¾") threaded	2 to 8 m^3/hr (9 to 35 US gpm)	Aluminium or bronze housings	18 to 113°C 65 to 230°F	Up to 24 bar (350 psi)
R	DN20 to DN80 (¾" to 3") weld	3 to 60 m^3/hr (13 to 264 US gpm)	Steel	35 to 82°C 95 to 180°F	Up to 35 bar (500 psi)

Contact us for more information

Europe, Middle East & Africa

AMOT UK
Western Way
Bury St Edmunds
Suffolk, IP33 3SZ, United Kingdom
Tel: +44 (0) 1284 762222
info@amot.com

AMOT Germany
Rondenbarg 25
22525 Hamburg
Germany
Tel: +49 (40) 8537 1298
germany@amot.com

Americas

AMOT Americas
8824 Fallbrook Drive
Houston, TX 77064
Tel: +1 (281) 940 1800
info@amotusa.com

Asia Pacific

AMOT Asia Pacific
RM 4102 - 4104 United Plaza
1468 Nanjing Road West
Shanghai 200040 China
Tel: +86 (0) 21 6279 7700
shanghai@amot.com

AMOT SE Asia
10 Eunos Road 8 #12-06
Singapore Post Centre
Singapore 408600
Tel: +65 (0) 6408 6265
singapore@amot.com